UNITED MICRO DEVICE INC.

UMD03BT through UMD36BT

SOT-23, Two-Line BI-DIRECTIONAL, TVS DIODE ARRAY

Description

The UMDXXBT series are Two-Line Bi-directional Transient Voltage Suppressor Arrays that designed to protect components which are connected to data and transmission linesagainst electrostatic discharge(ESD), electrical fast transients(EFT), and lightning

All pins are rated to withstand ESD pulses using the IEC 61000-4-2 contact discharge method, which can meet the requirement of Level 4, “Human Body Model” for air and contact discharge. AEC-Q101 qualified.

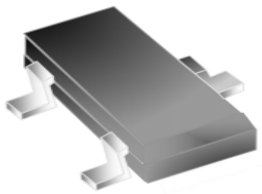

SOT-23

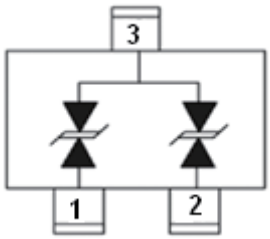

PIN Configuration

Features

※ 350 Watts peak pulse power per line (t_P=8/20μs)
※ Protect for two I/O lines with bi-directional
※ Low clamping voltage
※ Working voltages ：3.3V，5V，12V，15V，24V，36V
※ Low leakage current
※ ROHS compliant
※ AEC-Q101 qualified
※ IEC61000-4-2 (ESD) ±15kV (air),±8kV (contact)
※ IEC61000-4-4 (EFT) 40A (5/50ns)
※ IEC61000-4-5 (Lightning) 20A、18A、12A、10A、6A(8/20μs)

Mechanical Characteristics

※ SOT-23 package
※ Molding compound flammability rating : UL 94V-0
※ Weight 8 milligrams (approximate)
※ Quantity per reel : 3,000pcs
※ Lead finish : lead free
※ Marking code：see marking code

Main Applications

※ RS-232, RS-422 & RS-485
※ Servers, notebook, and desktop
※ Cellular handsets and accessories
※ Control & monitoring systems
※ Portable electronics
※ Wireless bus protection
※ Set-top box

 ©United Micro Device Inc.

ELECTRICAL CHARACTERISTICS (T_A=25℃)

Part Number	Marking	V_{RWM}	I_R@ V_{RWM}	V_{BR}@ I_T=1mA	V_C@1A	V_C@I_{PP}	I_{PP}①	C_J②
		V	μA	min(V)	max(V)	max(V)	A	typ（pF）
UMD03BT	3B2	3.3	1	4	8	26	20	100
UMD05BT	5B2	5	1	6	9.8	16.7	18	75
UMD12BT	AB2	12	1	13.3	19	25	12	30
UMD15BT	BB2	15	1	16.7	24	30	10	25
UMD24BT	CB2	24	1	26.7	43	60	6	15
UMD36BT	DB2	36	1	40	60	90	6	15

① Surge waveform: 8/20μs

② C_J measured @V_{RWM}=0V，1MHz（pin 1 to pin3，pin 2 to pin3）

ABSOLUTE MAXIMUM RATINGS (T_A=25ºC, RH=45%-75%, unless otherwise noted)

Parameter	Symbol	Value	Unit
Peak pulse power dissipation on 8/20 μs waveform	P_{PP}	350	W
ESD per IEC 61000-4-2 (Air) ESD per IEC 61000-4-2 (Contact)	V_{ESD}	+/- 15 +/- 8	kV
Lead soldering temperature	T_L	260 (10 sec.)	℃
Operating junction temperature range	T_J	-55 to +125	℃
Storage temperature range	T_{STG}	-55 to +125	℃

 ©United Micro Device Inc.

RATINGS AND V-I CHARACTERISTICS CURVES (T_A=25ºC, unless otherwise noted)

FIG.1:V- I curve characteristics (Bi-directional)

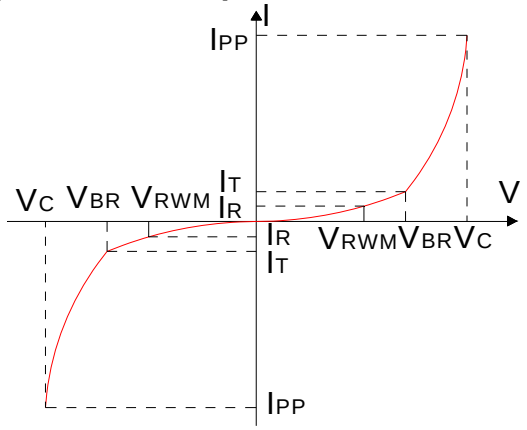

FIG.2: Pulse waveform (8/20μs)

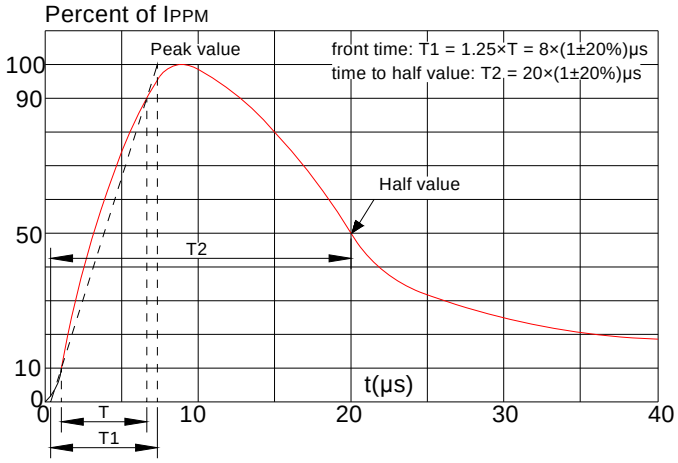

FIG.3: Pulse derating curve

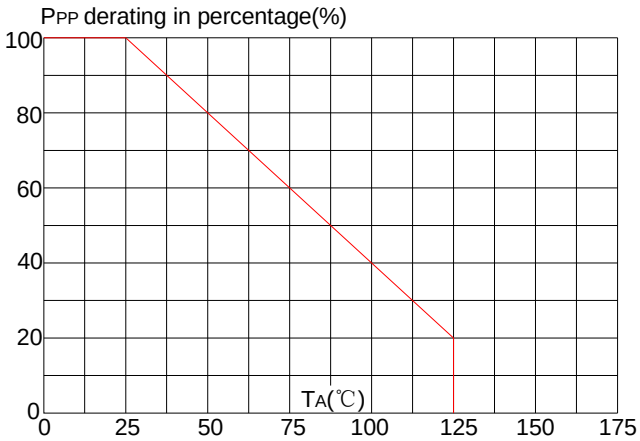

FIG.4: ESD clamping (8KV contact)

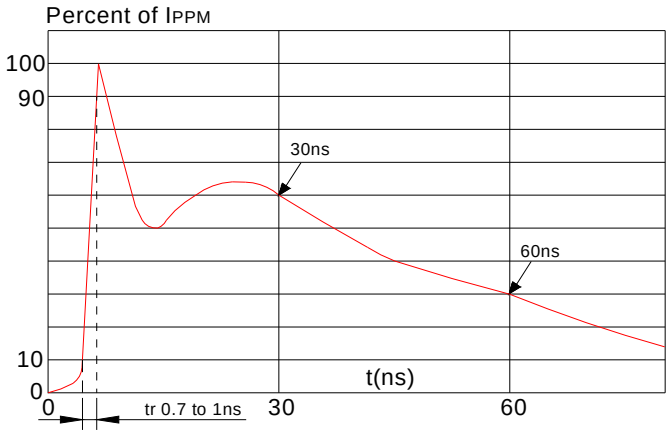

 ©United Micro Device Inc.

UMD12BT On RS-232 Port Application

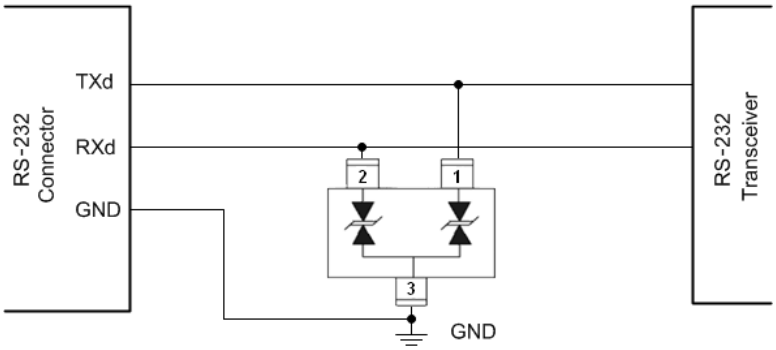

UMD12BT On RS-485 Port Application

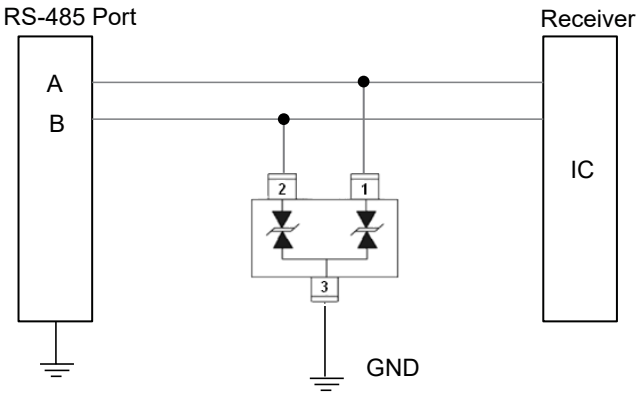

UMD12BT / UMD24BT On CAN Bus Application

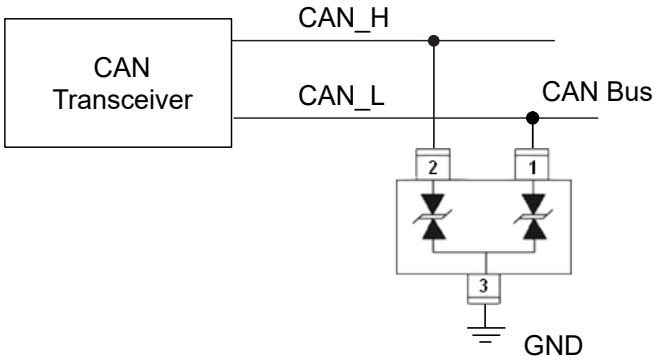

 ©United Micro Device Inc.

PRODUCT ORIENTATION(CONTINUED)

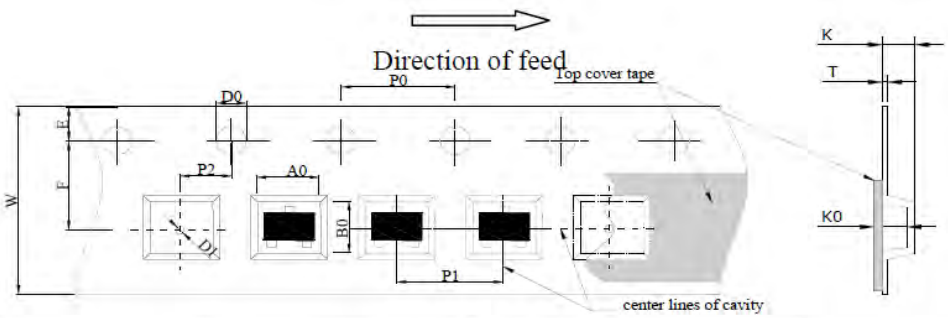

Package	Chip Size	Pocket Size B0×A0×K0(mm)	Tape Width	Reel Diameter	Quantity Per Reel	P0	P1
SOT-23	2.32×2.92×1.0	2.70×3.10×1.15	8mm	178mm(7″)	3000	4mm	4mm
D0	D1	E	F	K	T	W	
1.5mm	1.0mm	1.75mm	3.5mm	1.10mm	0.2mm	8mm	

ORDERING INFORMATION

Part Number	Reel Size	Reel(PCS)
UMDxxBT	7 inch	3000

"xx" =V_{RWM}

 ©United Micro Device Inc.

MARKING CODE

Part Number	Marking Code
UMD03BT	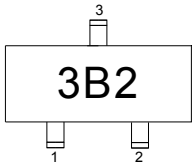
UMD05BT	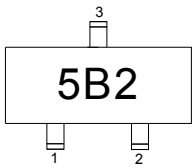
UMD12BT	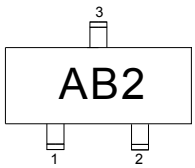
UMD15BT	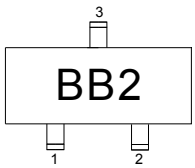
UMD24BT	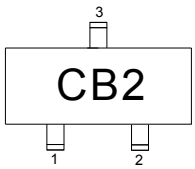
UMD36BT	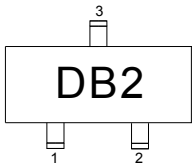

 ©United Micro Device Inc.

PACKAGE MECHANICAL DATA

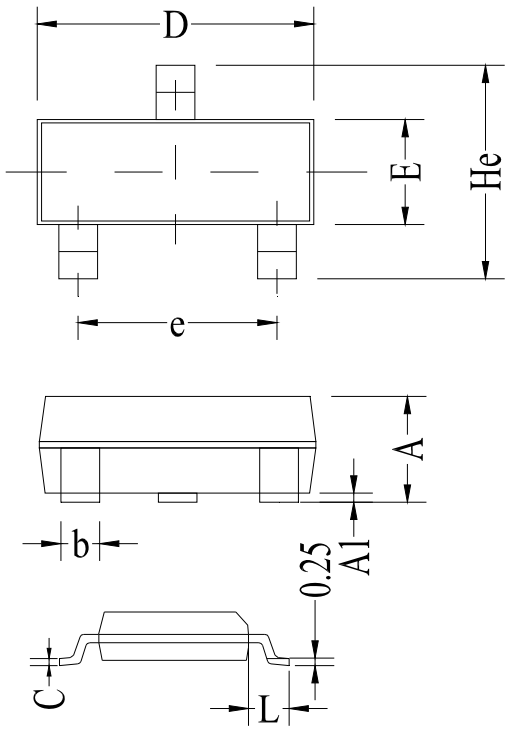

Symbol	Millimeter		Inches	
	Min	Max	Min	Max
A	0.9	1.15	0.035	0.045
A1	0.00	0.10	0.000	0.004
b	0.25	0.325	0.01	0.013
C	0.22	0.25	0.009	0.01
D	2.8	3.0	0.11	0.118
e	1.8	1.9	0.071	0.075
E	1.2	1.4	0.047	0.055
L	0.30	0.50	0.012	0.02
He	2.25	2.55	0.089	0.1
X	0.8		0.0315	
X1	0.95		0.037	
Y	0.80		0.0315	
Z	2.02		0.0795	

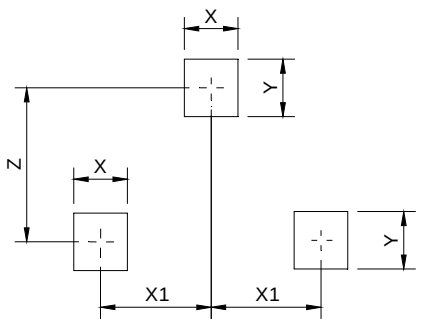

Land Pattern

 ©United Micro Device Inc.

Please Read Carefully

Information in this document is provided solely in connection with UMD products. UMD reserves the right to make changes, corrections, modifications or improvements, to this document, and the products and services described herein at any time, without notice.

All UMD products are sold pursuant to UMD's terms and conditions of sale.

Purchasers are solely responsible for the choice, selection and use of the UMD products and services described herein, and UMD assumes no liability whatsoever relating to the choice, selection or use of the UMD products and services described herein.

No license, express or implied, by estoppels or otherwise, to any intellectual property rights is granted under this document. If any part of this document refers to any third party products or services it shall not be deemed a license grant by UMD for the use of such third party products or services, or any intellectual property contained therein or considered as a warranty covering the use in any manner whatsoever of such third party products or services or any intellectual property contained therein.

Unless otherwise set forth in UMD's Terms and Conditions of sale UMD disclaims any express or implied warranty with respect to the use and/or sale of UMD products including without limitation implied warranties of merchantability, fitness for a particular purpose (and their equivalents under the laws of any jurisdiction), or infringement of any patent, copyright or other intellectual property right.

Unless expressly approved in writing by an authorized UMD representative, UMD products are not recommended, authorized or warranted for use in military, air craft, space, life saving, or life sustaining applications, nor in products or systems where failure or malfunction may result in personal injury, death, or severe property or environmental damage. Resale of UMD products with provisions different from the statements and/or technical features set forth in this document shall immediately void any warranty granted by UMD for the UMD product or service described herein and shall not create or extend in any manner whatsoever, any liability of UMD.

2010 United Micro Device Inc – All rights reserved

www.umdcorp.com