UNITED MICRO DEVICE INC. UMD05B-323

SOD-323 Single Line TVS Diode for ESD Protection

Description

TVS diodes are designed to replace multilayer varistors (MLVs) in portable applications such as cell phones, notebook computers, and PDA's. They offer superior electrical characteristics such as lower clamping voltage and no device degradation when compared to MLVs.

The UMD05B-323 is a Bi-Directional TVS that is designed to provide high overvoltage protection by clamping action and have instantaneous response to transient overvoltages. The SOD-323 is a very small package which allows space saving on high density printed circuit board and also gives the designer the flexibility to protect one line in applications where arrays are not practical.

Small Surface Mount Device TVS

SOD-323 Pin Configuration

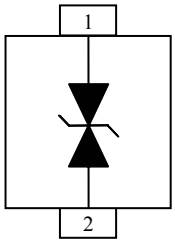

Pin	Description
1	Cathode
2	Cathode

Features

* Solid-state silicon avalanche technology
* SOD-323 package
* Bi-Directional protection
* Protects one I/O or Power line
* 150 Watts peak pulse power (tp = 8/20µs)
* Working voltage: 5V
* Low clamping factor Vcl/Vbr
* Low leakage current
* Full RoHS compliance
* Complies with the following standards:
  - IEC 61000-4-2 (ESD) Air-15kv, Contact-8kv
  - IEC 61000-4-4 (EFT) (5/50ns)
  - IEC 61000-4-5 (Surge) (8/20µs)

Mechanical Characteristics

* Molded SOD-323 package
* Weight 5 milligrams (Approximate)
* Available in Lead-Free Pure-Tin Plating
* Solder Reflow Temp: Pure-Tin (Sn), 260-270ºC
* Consult Factory for Leaded Device Availability
* Flammability Rating UL 94V-0
* 8mm Tape and Reel per EIA Standard 481
* Device Marking: Marking Code

Applications

* Automotive LIN-Bus
* Automotive CAN-Bus
* Remote Sensing
* Power over Ethernet (PoE)
* Power Line Communication (PLC)
* Set Top Boxes and Digital TV

 ©United Micro Device Inc

SOD-323 Single Line TVS Diode for ESD Protection

Absolute Maximum Ratings @ 25ºC unless otherwise specified			
Parameter	**Symbol**	**Value**	**Units**
Peak Pulse Power; pulse waveform = 8/20µs	Ppp	150	W
Peak Pulse Current; pulse waveform = 8/20µs	Ipp	12	A
ESD per IEC 61000-4-2 (Air) ESD per IEC 61000-4-2 (Contact)	Vpp	±15 ±8	kV
Operating Temperature	Tj	-55 to 125	ºC
Storage Temperature	Tstg	-55 to 150	ºC

Electrical Characteristics @ 25ºC unless otherwise specified						
Parameter	**Symbol**	**Conditions**	**Minimum**	**Typical**	**Maximum**	**Units**
Stand-off Voltage	Vwm				5.0	V
Breakdown Voltage	Vbr	It=1mA	6.0			V
Leakage Current	Ir	Vwm=5V, T=25°C		0.1	1	µA
Clamping Voltage	Vc	Ipp=1A Tp=8/20µs			7.2	V
Clamping Voltage	Vc	Ipp=12A Tp=8/20µs			12.1	V
Peak Pulse Current	Ipp	Tp=8/20µs			12	A
Junction Capacitance	Cj	Vr=0V, f=1MHz		30		pF

Bi-Directional Protection

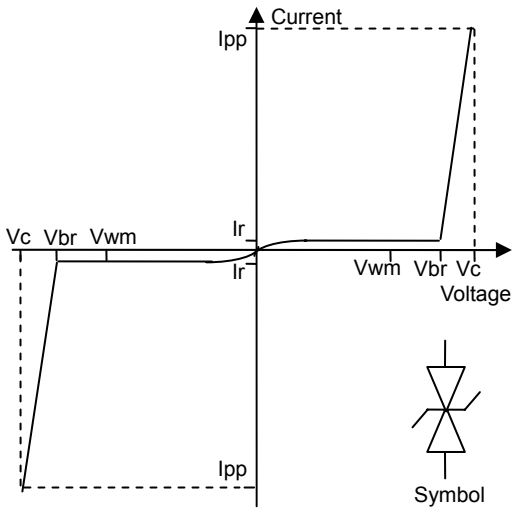

 ©United Micro Device Inc

Electrical Characteristics Graphs

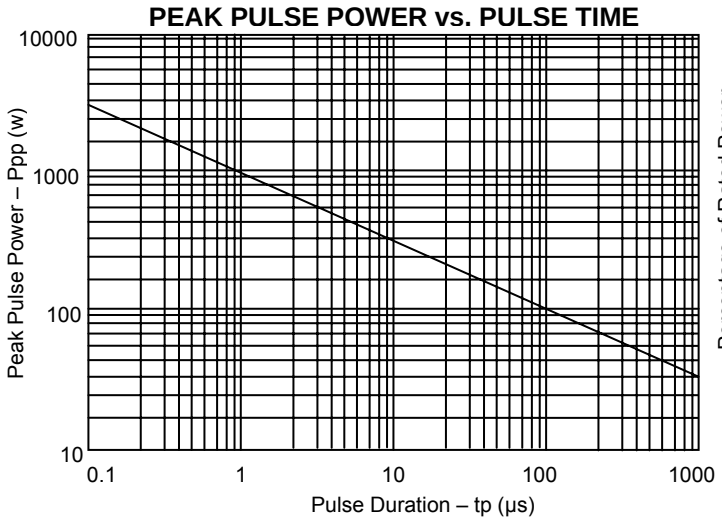

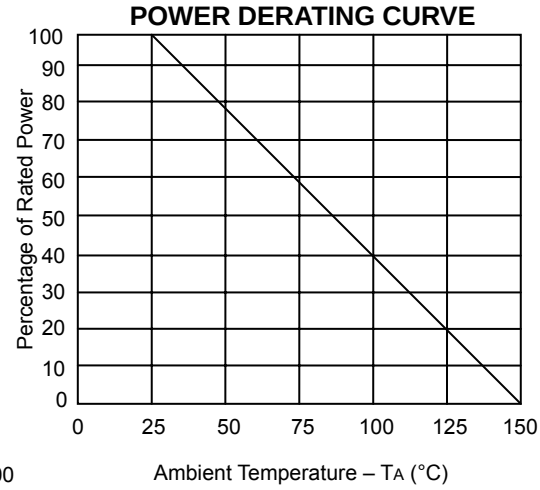

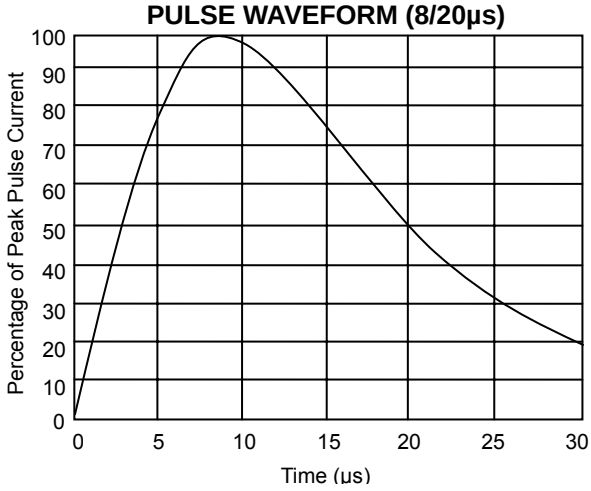

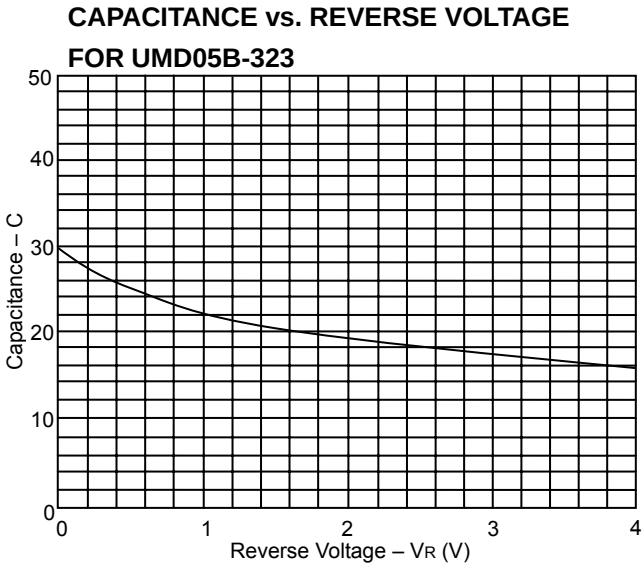

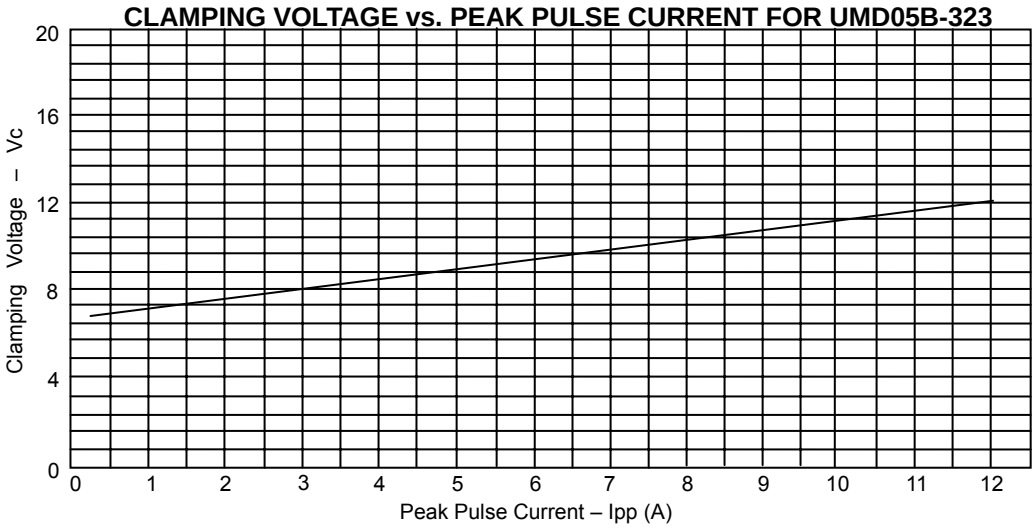

 ©United Micro Device Inc

Applications Information

The UMD05B-323 is designed to protect one data or power supply line. The device is Bi-directional and may be used on lines where the signal polarity is above or below ground. Either of the two cathode pins can be placed towards the line that is to be protected.

Circuit connectivity is as follows:

- Line 1 is connected to Pin 1 or 2
- Pin 1 or 2 is connected to Ground

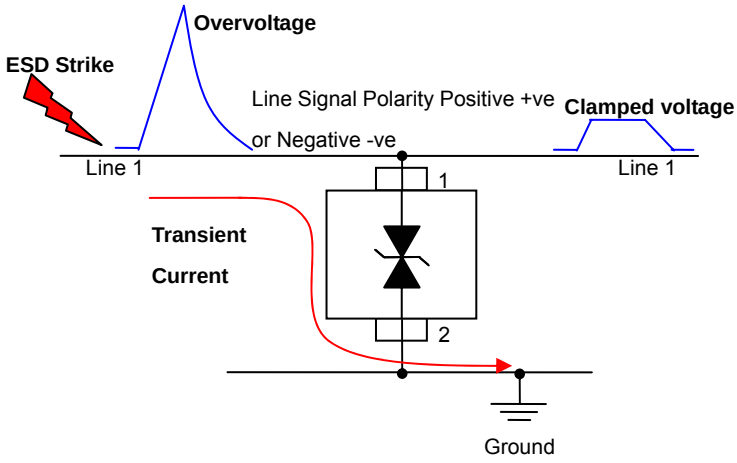

UMD05B-323 on Automotive LIN-Bus Application

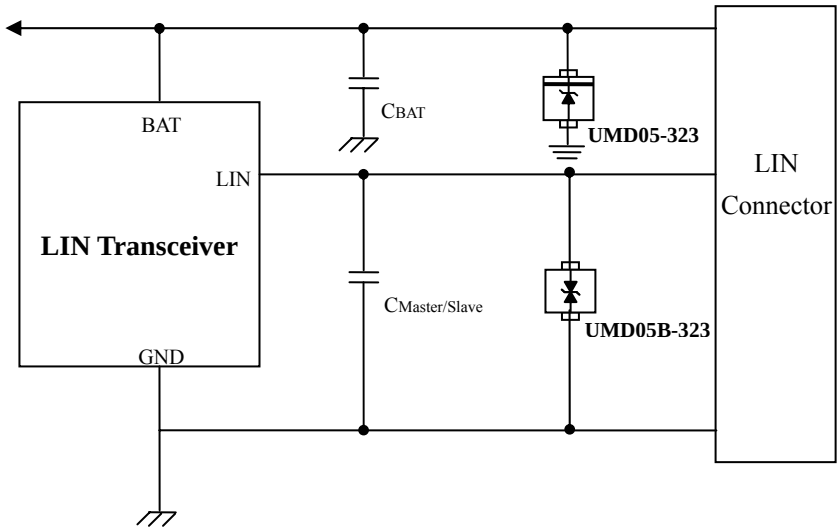

 ©United Micro Device Inc

UMD05B-323 on Automotive CAN-Bus Application

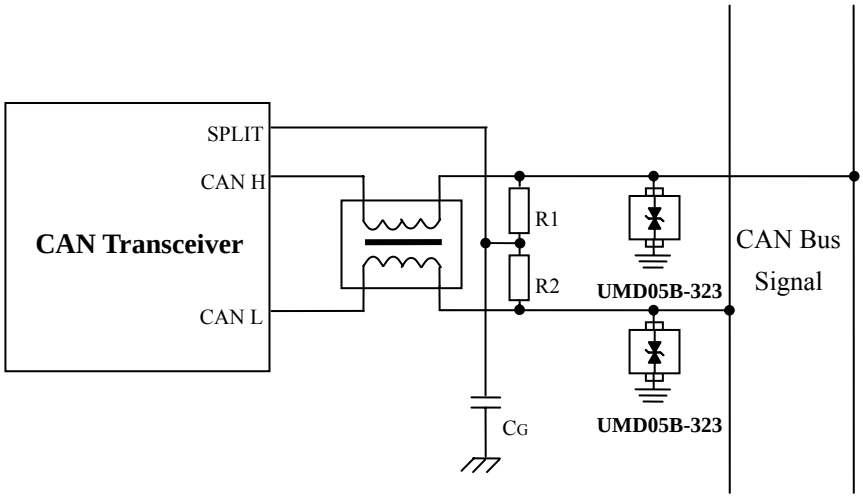

UMD05B-323 on Remote Sensor Application

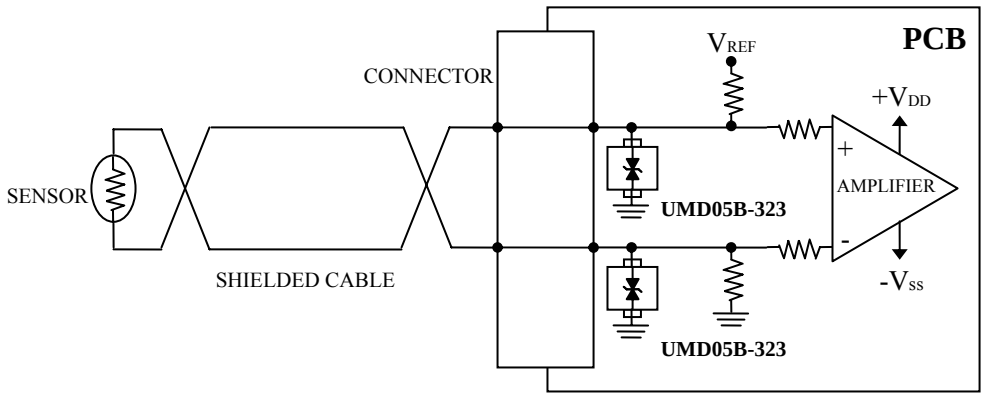

 ©United Micro Device Inc

Circuit Board Layout Recommendations

Good circuit board layout is critical for creating an effective surge suppression circuit. The following PCB guidelines are recommended to enhance the performance of a TVS device:

- Place the TVS near the input terminals or connectors to restrict transient coupling.
- Minimize the path length between the TVS and the protected line.
- The ESD transient return path to ground should be kept as short as possible.
- Place a TVS and decoupling capacitor between power and ground of components that may be vulnerable to electrostatic discharges to the ground plane.
- Minimize all conductive loops including power and ground loops.
- Use multilayer boards when possible.
- Minimize interconnecting line lengths.
- Never run critical signals near board edges.
- Fill unused portions of the PCB with ground plane.

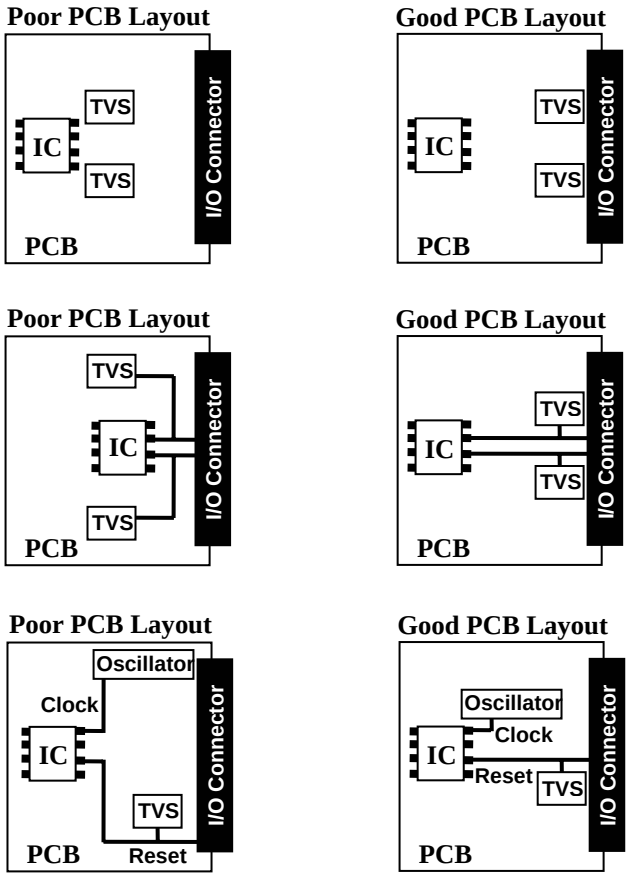

Matte Tin Lead Finish

Matte tin has become the industry standard lead-free replacement for SnPb lead finishes. A matte tin finish is composed of 100% tin solder with large grains. Since the solder volume on the leads is small compared to the solder paste volume that is placed on the land pattern of the PCB, the reflow profile will be determined by the requirements of the solder paste. Therefore, these devices are compatible with both lead-free and SnPb assembly techniques. Unlike other lead-free compositions, matte tin does not have any added alloys that can cause degradation to solder joint.

 ©United Micro Device Inc

Soldering Method for UMD's Products

1. Storage environment: Temperature = 10ºC~35ºC Humidity = 65%±15%
2. Reflow soldering of surface-mount devices

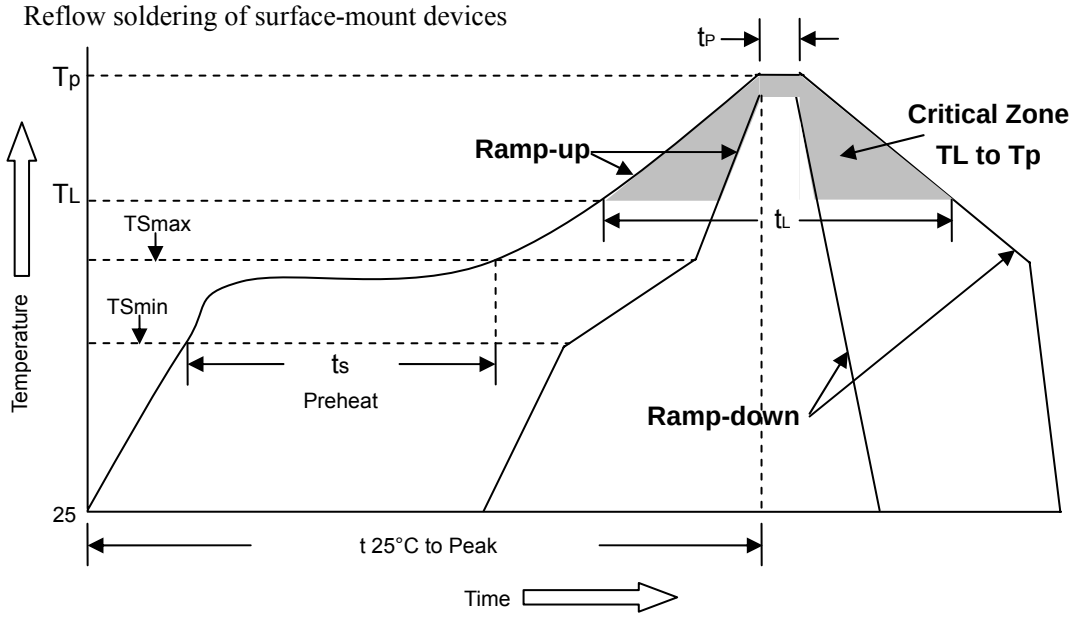

Profile Feature	Pb-Free Assembly
Average ramp-up rate (T_L to T_P)	<3ºC/sec
Preheat - Temperature Min (T_{Smin}) - Temperature Max (T_{Smax}) - Time (min to max) (t_s)	 150ºC 200ºC 60~180sec
T_{Smax} to T_L - Ramp-up Rate	 <3ºC/sec
Time maintained above: - Temperature (T_L) - Time (t_L)	 220ºC 50~145sec
Peak Temperature (T_p)	260ºC +0/-5ºC
Time within 5ºC of actual Peak Temperature (t_p)	20~40sec
Ramp-down Rate	<6ºC/sec
Time 25ºC to peak Temperature	<8 minutes

Flow (wave) soldering (solder dipping)

Products	Dipping time
Pb devices	5sec±1sec
Pb-Free devices	5sec±1sec

 ©United Micro Device Inc

SOD-323 Single Line TVS Diode for ESD Protection

SOD-323 Dimension Drawing

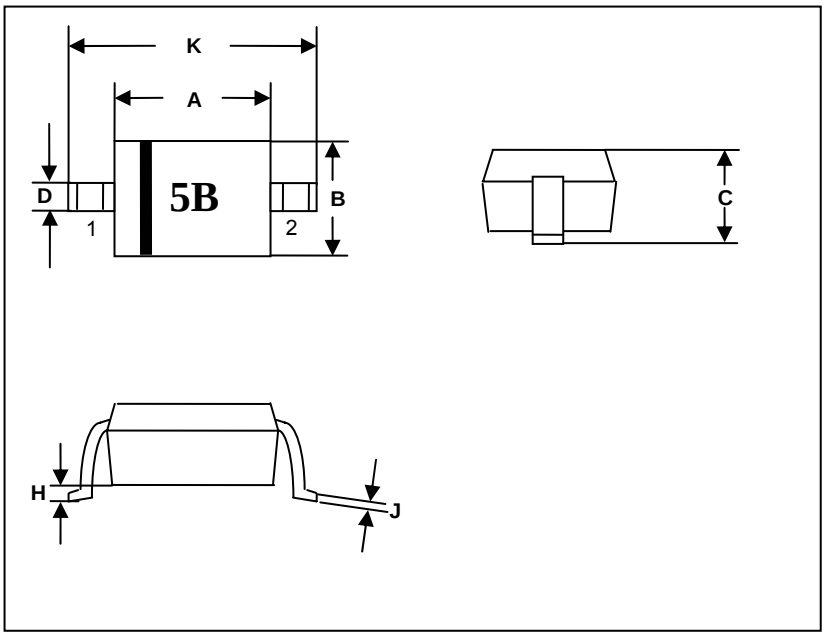

Dimensions				
Dim	Inches		mm	
	Min	Max	Min	Max
A	0.063	0.071	1.60	1.80
B	0.045	0.057	1.15	1.45
C	0.036	0.043	0.92	1.10
D	0.010	0.016	0. 25	0.40
H	-	0.004	-	0.10
J	0.004	0.007	0. 09	0.18
K	0.091	0.106	2.30	2.70

SOD-323 Carrier Dimension

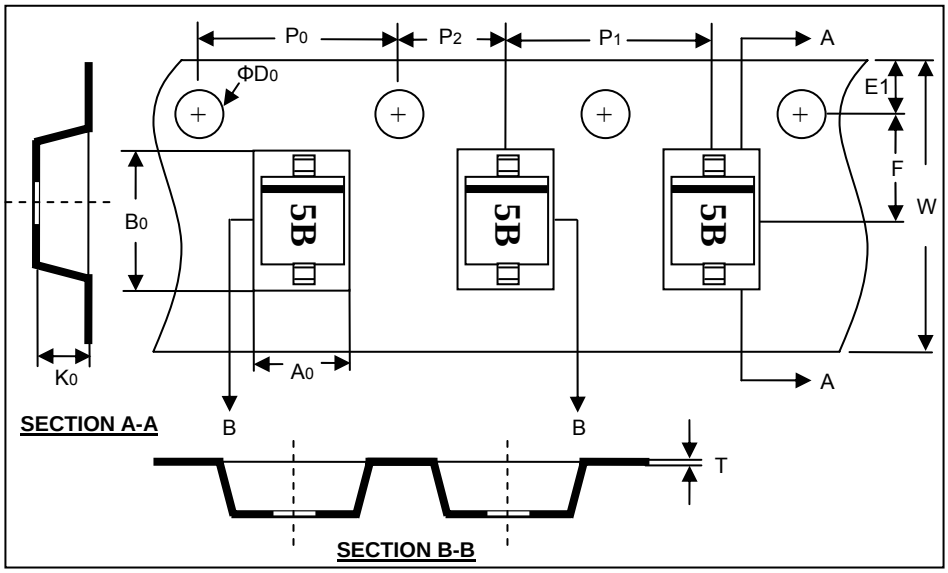

Mounting Pattern

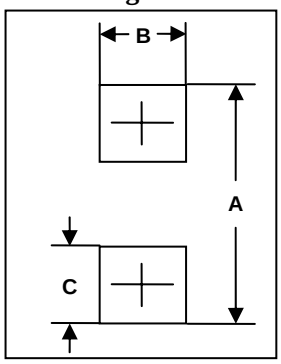

Typical		
Dim	MM	Inches
A	3.00	0.118
B	0.80	0.031
C	0.80	0.031

Dimensions in mm.

Reel Dia.	Tape Width	A0	B0	K0	ΦD0	E1
178mm (7”)	8mm	1.55±0.10	2.90±0.10	1.35±0.10	1.50±0.10	1.75±0.10
F	W	P0	P2	P1	T	
3.50±0.05	8.00±0.30	4.00±0.10	2.00±0.05	4.00±0.10	0.25	

 ©United Micro Device Inc

Marking Code

Part Number	Device Marking
UMD05B-323	5B

Ordering Information

Part Number	Lead Finish	Qty Per Reel	Reel Size
UMD05B-323	Pb-Free	3,000	7 inch

Please Read Carefully

Information in this document is provided solely in connection with UMD products. UMD reserves the right to make changes, corrections, modifications or improvements, to this document, and the products and services described herein at any time, without notice.

All UMD products are sold pursuant to UMD's terms and conditions of sale.

Purchasers are solely responsible for the choice, selection and use of the UMD products and services described herein, and UMD assumes no liability whatsoever relating to the choice, selection or use of the UMD products and services described herein.

No license, express or implied, by estoppels or otherwise, to any intellectual property rights is granted under this document. If any part of this document refers to any third party products or services it shall not be deemed a license grant by UMD for the use of such third party products or services, or any intellectual property contained therein or considered as a warranty covering the use in any manner whatsoever of such third party products or services or any intellectual property contained therein.

Unless otherwise set forth in UMD's Terms and Conditions of sale UMD disclaims any express or implied warranty with respect to the use and/or sale of UMD products including without limitation implied warranties of merchantability, fitness for a particular purpose (and their equivalents under the laws of any jurisdiction), or infringement of any patent, copyright or other intellectual property right.

Unless expressly approved in writing by an authorized UMD representative, UMD products are not recommended, authorized or warranted for use in military, air craft, space, life saving, or life sustaining applications, nor in products or systems where failure or malfunction may result in personal injury, death, or severe property or environmental damage. Resale of UMD products with provisions different from the statements and/or technical features set forth in this document shall immediately void any warranty granted by UMD for the UMD product or service described herein and shall not create or extend in any manner whatsoever, any liability of UMD.

2010 United Micro Device Inc – All rights reserved

www.umdcorp.com